ROHS

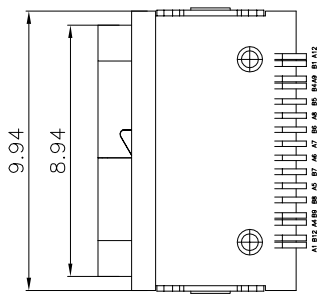

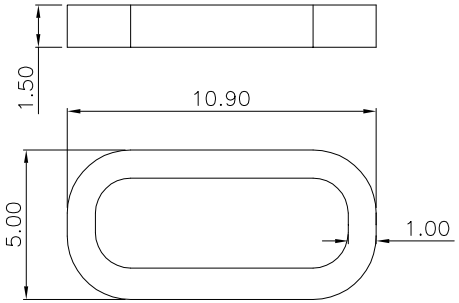

防水圈

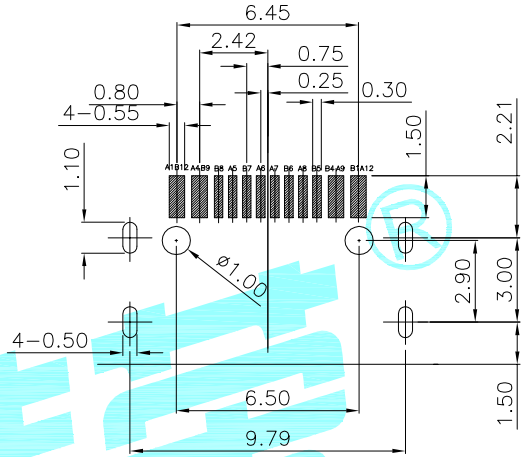

RECOMMENDED P.C.B. LAYOUT
TOLERANCE UNSPECIFIED ±0.05mm

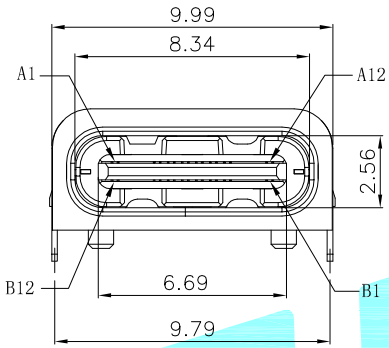

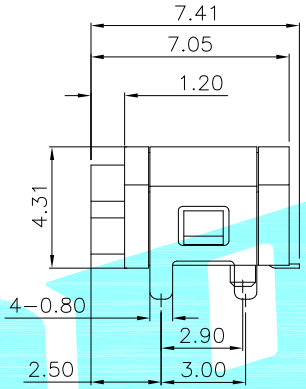

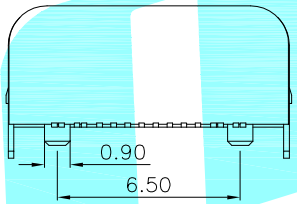

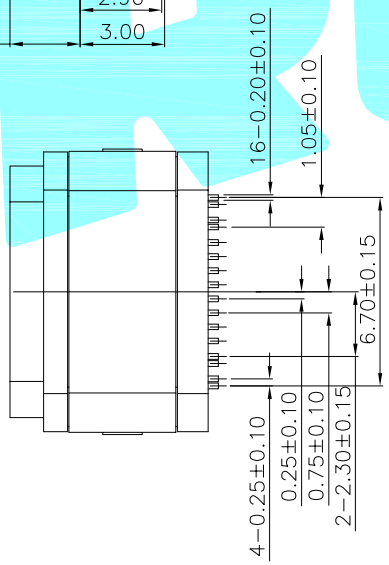

NOTES:
SPECIFICATION:
1. CURRENT RATING: 3.0A MAX
2. VOLTAGE: 100 VAC
3. LNSERTION FORCE : 5N~20N
4. UNMATING FORCE: 8N~20N
5. DURABILITY: 10,000 CYCLES
6. WATER PROOFNESS:THISPRODUCTIS BASED ON IPX7.

PIN	SIGNAL NAME	PIN	SIGNAL NAME
A1	GND	B12	GND
A4	VBUS	B9	VBUS
A5	CC1	B8	SBU2
A6	DP1	B7	DN2
A7	DN1	B6	DP2
A8	SBU1	B5	CC2
A9	VBUS	B4	VBUS
A12	GND	B1	GND

ITEM	PART NAME	TER'NO.	QTY.	MATERIAL	FINISHING
⑥	防水圈	——	1	硅胶	Black
⑤	Shell	——	1	STAINLESS STEEL	Ni Plated
④	SHIELDING PLATE	——	1	STAINLESS STEEL	Ni Plated
③	Contact	——	16	COPPER ALLOY	TIN/Au/NI Plated
②	Shell Housing	——	1	HIGH TEMPERATURE PLASTIC	Black
①	Housing	——	1	HIGH TEMPERATURE PLASTIC	Black

APPROVALS		DATE
DRAWN	JIANKUN.LU	2018.08.01
CHECKED		
APPROVALS		

HRO韩索® ELECTRONICS CO.,LTD

TITLE:	USB CONNECTOR
PART NO.	TYPE−C−31−E−03
UNIT: mm	SCALE: 1:1
DRAWING NO.	——
SHEET 1 OF 1	PROJ:

TOLERANCES ARE			ANGLE
	30~以上	±0.30	±2°
	10~30	±0.25	
	5~10	±0.20	
	~ 5	±0.15	

ECN NO.	REV.	DATE.	DESCRIPTION.	CHANGE.	CHECK.	APPRO.
——	A	——	NEW	——	——	——