ROHS

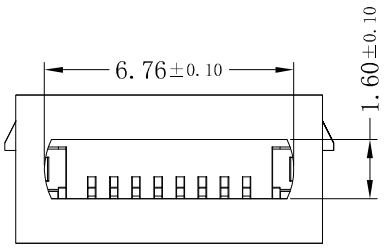

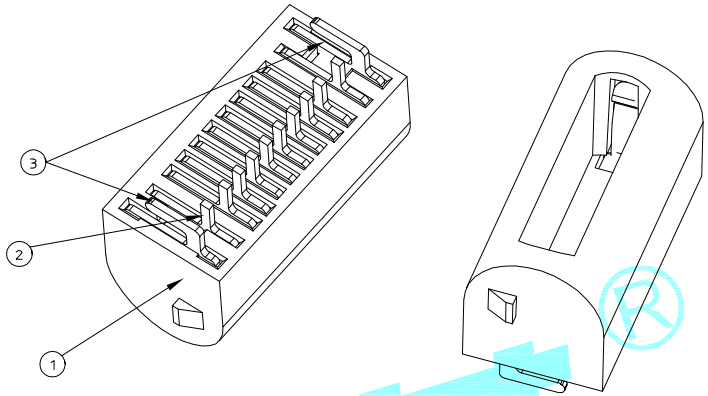

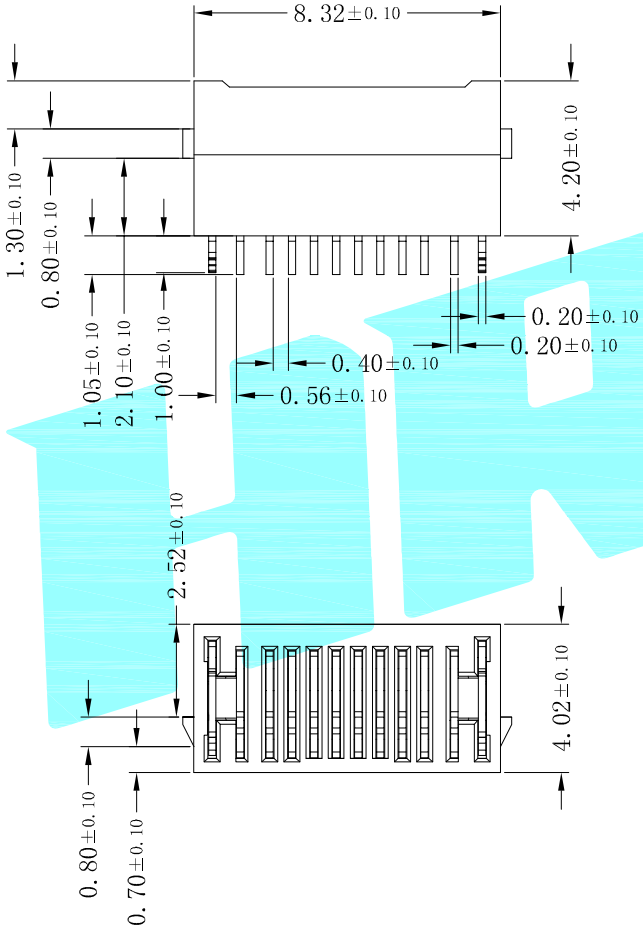

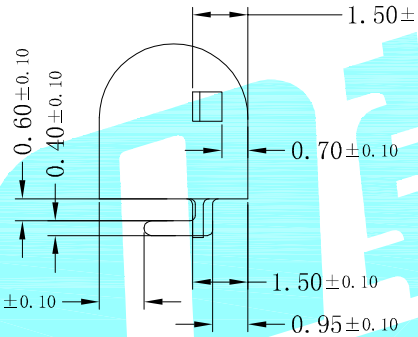

Notes:

1. Material:
   1.1. HOUSING: LCP E301, Color:White/Black.
   1.2. Contact: BRASS C5210
   1.3: Clip: Stainliess Steell SUS201

2. PLATING:
   2.1. CONTACT:PLATED GOLD FLASH FOR CONTACT AREA.
   2.2. Clip:Plated Ni

3:ENVIRONMENTAL:
   OPERATION TEMPERAURE -20° C-80° C.

4:PRODUCT COMPLIANT TO THE REQEST ROHS.

NO.	DESCRIPTION.	QTY.	MATERIAL	TREATMENT
3	GND LATCH.	2	STAINLESS STEEL	NICKEL PLATED OVERALL,
2	CONTACT.	10	COPPER ALLOY	NICKEL UNDERPLATING OVER ALL, GOLD PLATING AT-CONTACT AREA
1	HOUSING.	1	HIGH TEMP	MOLED COLOR:White/BLACK

APPROVALS		DATE	HRO韩荣® ELECTRONICS CO.,LTD	
DRAWN	D.J.LV	2017/12/26		
CHECKED			TITLE:	USB CONNECTOR
APPROVALS			PART NO.	U-P-10SD-W-1

TOLERANCES ARE			ANGLE	UNIT: mm	SCALE: 1:1	PROJ:
30~以上	±0.30					
10~30	±0.20					
5~10	±0.15		±2°	DRAWING NO.	———	SHEET 1 OF 1
~ 5	±0.10					

ECN NO.	REV.	DATE.	DESCRIPTION.	CHANGE	CHECK	APPRO.
———	A	———	NEW	———	———	———